Specifications

W1 Pro

Frame and Components

Frame	Carbon, 28", 47cm
Rigid fork	Reany Bikes Custom , Carbon, 28"
Handlebar	Reany Bikes custom, Carbon fiber , W=630
Grips	L=R=133MM, black
Seatpost	SP-720, 3D Forged Alu, 30.9 x 350mm
Saddle	Selle Royal Essenza+
Pedals	Steady Flat non-slip pedal, with reflectors
Drivetrain	Gates drive belt CDN, 11M-122T-12CT
Chain ring	55T, for Gates drive belt
Crankset	170 mm
Freewheel	22T, for Gates drive belt
Bottom Bracket	Sealed BB with a torque sensor
Front hub	Formula AL 14G*28H
Brakes	Magura MT 30, hydraulic disc brake
Tires	28"45C/47-622, 60TPI puncture proof, reflect
Tubes	28" F/V
Rims	28" , Double wall
Spokes	14G, Stainless, black(28x); 13G, Stainless, black(36X)
Front light	LED, intergrated in the handlebar, 40 LUX
Tail light	COB LED, integrated in the mudguard
Mudguards	Alu, 28" 59 mm, matte black
Bell	Reany Bikes custom
Kickstand	Reany Bikes custom

Electronics

Assist Speed	25km/h
Range	Up to 100km, depending on terraine and assist mode
Battery	Inner tube removable battery 360Wh LG with smart BMS, IPX6
Charger	2A EU standard
Motor	Mivice M070+ 250W 35Nm IP65
Display	IPS, matrix, 2.0", custom intergrated into handlebar

Geometries

Seat Tube Length [A]	470mm
Top tube length [B]	622mm
Head tube length [C]	180mm
Head tube angle [D]	72°
Seat tube angle [E]	73°
Reach [F]	440mm
Wheelbase [G]	1122mm
Stack [H]	640mm

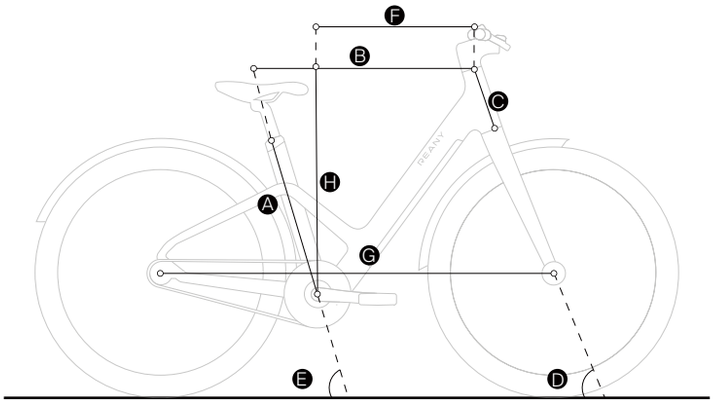

Chainstay length	455.5mm
Bottom bracket height	300mm
Bottom bracket Offset	60mm
Stand-over height	485mm
Overall length	1850mm
Wheel size	28"
Weight	14.5kg