# Specifications

W1

## Frame and Components

| | |
|---|---|
| Frame | Aluminium 6061, double butted, 28",47cm |
| Rigid fork | Reany Bikes Custom , Alloy fork, 28" |
| Handlebar | Reany Bikes custom, Carbon fiber, W=630 |
| Grips | L=R=133MM, black |
| Seatpost | SP-720, 3D Forged Alu, 30.9 x 350mm |
| Saddle | Selle Royal Essenza+ |
| Pedals | Steady Flat non-slip pedal, with reflectors |
| Drivetrain | Gates drive belt CDN, 11M-122T-12CT |
| Chain ring | 55T, for Gates drive belt CDN |
| Crankset | 170 mm |
| Freewheel | 22T, for Gates drive belt CDC |
| Bottom Bracket | Sealed BB with a torque sensor |
| Front hub | AL 14G*28H |
| Brakes | Tektro hydraulic disc brake |
| Tires | 28"45C/47-622, 60TPI puncture proof, reflect |
| Tubes | 28" F/V |
| Rims | 28" , Double wall |
| Spokes | 14G, Stainless, black(28x); 13G, Stainless, black(36X) |
| Front light | LED, intergrated in the handlebar, 40 LUX |
| Tail light | COB LED, integrated in the mudguard |
| Mudguards | Alu, 28" 59 mm, matte black |
| Bell | Reany Bikes custom |
| Kickstand | Reany Bikes custom |

## Electronics

| | |
|---|---|
| Assist Speed | 25km/h |
| Range | Up to 100km, depending on terraine and assist mode |
| Battery | Inner tube removable battery 360Wh LG with smart BMS, IPX6 |
| Charger | 2A EU standard |
| Motor | Mivice M070+ 250W 35Nm IP65 |
| Display | LCD, custom intergrated into handlebar |

## Geometries

| | |
|---|---|
| Seat Tube Length [A] | 470mm |
| Top tube length [B] | 622mm |
| Head tube length [C] | 190mm |
| Head tube angle [D] | 72° |
| Seat tube angle [E] | 73° |
| Reach [F] | 435mm |
| Wheelbase [G] | 1122mm |
| Stack [H] | 655mm |

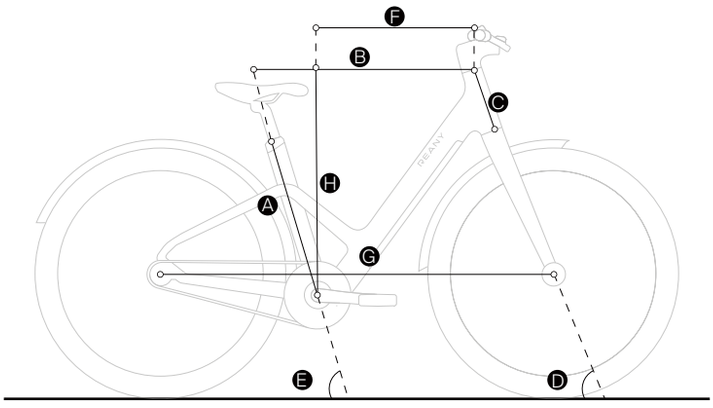


| | |
|---|---|
| Chainstay length | 455.5mm |
| Bottom bracket height | 300mm |
| Bottom bracket Offset | 60mm |
| Stand-over height | 485mm |
| Overall length | 1850mm |
| Wheel size | 28" |
| Weight | 18.9kg |

The stated weight refers to the bike in its purest form(excl. pedala and accessories), reflecting our lightweight design.